WTCI-126-P

THE PORT AUTHORITY OF NY & NJ

WORLD TRADE CENTER

Electrical Design Guidelines, Specifications and Standard Details

Electrical

Communications

November 25, 1997

November 25, 1997

WORLD TRADE CENTER
DESIGN GUIDELINES

STANDARDS FOR ELECTRICAL, COMMUNICATIONS DESIGN AND FIRE ALARM

STANDARDS FOR ELECTRICAL, FIRE ALARM AND COMMUNICATIONS DESIGN

TABLE OF CONTENTS

SECTION	TITLE	PAGE
ELECTRICAL DESIGN GUIDELINES		
A.	BUILDING DESCRIPTION	1
B.	SUBMISSION REQUIREMENTS	1
C.	GENERAL REQUIREMENTS	2
D.	WIRING	2
E.	RACEWAYS AND BOXES	5
F.	SWITCHES AND PANELS	6
G.	LIGHTING FIXTURES	7
H.	SECURITY SYSTEMS	8
I.	A/C SYSTEMS AND SMOKE DETECTION SYSTEMS	9
J.	DEMOLITION NOTES	9
K.	CORE DRILLING	10
L.	FINAL TESTING	11
PROPRIETARY COMMUNICATIONS SYSTEMS GUIDELINES		
A.	GENERAL	12
B.	SPECIAL REQUIREMENTS	12
	1. Telephone Closets	
	2. Distribution Systems	
	3. Contract Drawing Information	
	4. Cables	

ELECTRICAL DESIGN GUIDELINES

A. BUILDING DESCRIPTION

1. All tenant circuit power wiring emanates from the electrical closets. These closets are generally available in each building on a floor by floor basis. Electrical closets contain panelboards for lighting and receptacle outlet circuits. Power available for the tenants use is based on six watts per square foot. Additional power is available if required and will be determined on a building availability basis. Local switch control for tenant lighting is permitted and has been installed in many areas as an energy conservation measure. Tenants are encouraged to provide such switching at their own expense especially full floor tenants who have metered electrically and can realize savings by using local switch control.

2. Tower base building lighting panels contain automatic switches for control of lighting by floor and by quadrant with multiple programmable times via the WTC lighting control computer.

3. Floor wiring is by means of header ducts and a dual cell floor system. One cell is for 120Volt receptacle outlets and 277Volt lighting. The other cell is for telephone and communications cables. The cells are generally connected to the header ducts on 6' 8" centers with home run headers to the electrical and telephone closets.

B. SUBMISSION REQUIREMENTS

1. The tenant representative must indicate planned electrical wiring changes on drawings with specifications and submit them to the WTC for review and approval.

2. Show all electrical work, including all conduits, wiring, boxes and penetrations required. Indicate the size and number of conduits, the wiring and the wiring method.

3. The tenant's representative shall submit for review and approval by the WTC,
catalog cuts for all new electrical panelboards and new circuit breakers which shall indicate that they are U.L. listed. In addition , whenever circuit breakers are to be installed in existing panelboards, or in panelboards not made by the circuit breaker manufacturer, such circuit breakers shall be U.L. classified for use in load centers and panelboards manufactured by others.

4. A copy of all approved shop drawings shall be sent to the WTC Construction unit, Att. Mr. Ed McGinley.

C. GENERAL REQUIREMENTS

1. Contractor shall field verify dimensions of finished construction prior to fabrication and installation of fixtures and equipment

2. Mounting heights of equipment and devices shall be as indicated on the architectural drawings.

3. Electrical power must be shut off prior to the Contractor performing any work in raceways with live electrical circuits or on any other live electrical circuits or equipment. Power interruption will be permitted only between the hours of 6:00pm and 8:00am. The actual dates, times, and duration of all power interruption shall be subject to prior approval of the WTC.

4. All stages of the installation will be inspected by the WTC for compliance with the requirements of the Contract Drawings and Specifications. .

D. WIRING

1. All wiring for power, lighting and control shall be in conduit

2. "BX" type cables are not permitted.

3. Color Coding
The Contractor shall match the color coding that is being used in the building; any deviation due to limited quantities of cable may be permitted upon written approval by the Architect. Cable is identified as follows and is read left to right:

	System Voltage:	
120/208V	Phase	277/480V
Black	A	Brown
Red	B	Orange
Blue	C	Yellow
White	Neutral	Gray
Green	Ground	green

4. In lieu of a separate green grounding wire and grounding bushings a flexible metallic raceway for connection of lighting fixtures may be utilized as the grounding conductor if a locking type shake proof connection especially designed to insure positive grounding is provided

4. Wherever a grounding conductor is required(feeders to motor loads greater than 1/8 included), a separate ground wire shall be installed.

5 The service (system) neutral conductor shall not be bonded to the equipment ground at any point in the system, except at the substation.

6 Every other pedestal in every other row of a raised floor system shall be grounded with a minimum number six AWG conductor such that one corner of every other panel is grounded.

7. Ground fault protection is required for all appliances associated with liquids or within six feet of sinks or running water.

8 Identification of Wire

a) All wires shall be identified by circuits in all cabinets, boxes, wiring troughs and other enclosures, and at all terminal points, i.e. receptacle etc.

b) The circuit designations shall be as shown on the contract drawings. Tags shall be attached to the wires so that they will be readily visible.

c) Brady B-500 vinyl cloth wire and terminal markers or equal shall be used for all wire identification.

9 Fixture Wiring

a) All wiring within lighting fixtures or from the fixture to the building wiring splice shall conform to all applicable codes.

b) Fixture Hookup Wire

i) *Splices shall not be permitted in fixture hookup wire.*
ii) Connections to branch circuit conductors and to existing fixture wiring shall be made by insulated spring connectors or crimp type connectors.

10. Splices

a) All splices for wire size #10 and smaller shall be made with an insulated spring connector applied to the twisted conductors. Two (2) half-lapped layers of vinyl tape extending a distance of not less than one (1") from the connector shall be applied.

b) Where the contractor makes the connections to existing splices, the existing splice shall be cutoff and stripped prior to making the final connections.

11. Where equipment, lighting fixtures and wiring devices are shown with circuit numbers only, the minimum branch circuiting requirements shall be as follows:

1 Lighting Fixtures - 2#12, #12 GRD. - 3/4"C.
2. Receptacles - 2#12, #12GRD. - 3/4" C.
3. 208/120 volt and 480/277 volt wiring shall be run in separate raceway systems.
4. Emergency services shall be run in separate raceways from all other systems.

12. Wire sizes shall be increased to compensate for voltage drop as follows:

a) 120V and 208v circuits longer than 80' shall utilize minimum #10AWG.
b) 277V circuits longer than 150' shall utilize minimum #10AWG.

13. No splices or joints will be permitted in either feeders or branches except at outlets or accessible terminal, splice or junction boxes.

14. All convenience type receptacles shall be of the grounding type.

15. Only eight (8) outlets are permitted per 15ampere circuit for all new construction.

16. No more than twenty (20) outlets are permitted per 277Volt, twenty ampere lighting circuit.

17. Provide a one-line diagram of the distribution system showing all modifications thereto. Indicate the size and rating of all fuses , main circuit breakers, disconnect switches etc. Indicate all metering and shutdown functions.

18. Meter pan shall be Murray Model "RH173GR" with "IN" kit number UX056. The meter is provided and installed by the WTC.

19. All tenancies equal to or above ten thousand square feet shall be metered.

20. All motors ½ HP and above shall be rated three phase 460 Volts.

E. RACEWAY AND BOXES

1. Minimum conduit size shall be 3/4" except the final connection from the outlet box to the fixture.

2. Maximum size EMT shall be two (2) inches.

3. All vertical runs of conduit or tubing terminating in the bottoms of wall boxes or cabinets, or similar locations, shall be protected from the entrance of foreign material prior to the installation of conductors.

4. Unless otherwise specified, all conduit and tubing shall be installed concealed. In general, all conduit and tubing shall be run in hung ceilings and furred spaces where they exist. Where conduit is run exposed, it shall be securely supported with zinc coated malleable iron pipe straps or other approved metals.

5. Every conduit system shall be installed complete before any conductors are drawn in. Wire pulling lubricants, when utilized, shall be in accordance with the requirements of Underwriter's Laboratories, Inc., applicable to the specific conductor or cable insulation and raceway materials.

6. All conduit and tubing shall be cut square and reamed at the ends.

7. Conduit and tubing runs shall be mechanically and electrically continuous from services to all outlets. Conduit shall enter and be securely connected to cabinet, junction box, pull box or outlet box by means of locknuts on the outside and an insulated metallic bushing on the inside. In tubing or flexible metal conduit, the one compression locknut shall be made wrench-tight. All locknuts shall be the bonding type with sharp edges for digging into the metal wall of an enclosure and shall be installed in a manner that will assure a locking and electrically continuous installation. Locknuts and bushings will not be required where conduits are screwed into tapped connections.

8. Flexible metal conduit shall be used for final connection of lighting fixtures and wiring devices to be installed in hung ceilings or in removable hollow metal construction such as movable partitions. When designated by the Architect on final approved tenant drawings, flexible metal conduit shall be used for final connection of lighting fixtures and wiring devices to be installed in movable walls or movable partitions. Flexible metal conduit shall be used in such designated movable walls and movable partitions.

9. Penetrations:

   a) Penetrations through walls and floors shall be fire stopped as required by Article 300-21 of the NEC and by the NYC Building Code.

   b) The Contractor shall install in all after set fittings, two (2) Palusol packets (fire stop), one (1) on each side of the after set baffle Packets can be purchased from the Authority and installed by the Contractor.

10. PVC conduits (rigid and flexible) are not permitted.

11. Raceways shall be run parallel to building structural lines. Raceways shall not be run horizontally below 8'-0" in partitions.

12. Wiring channels and wireways shall be free from projections and rough or sharp edges throughout, and all points or edges over which conductors must pass and may be subject to injury or wear shall be rounded or bushed. Insulated bushings shall be installed at points of entrance and exit of flexible wiring.

13. Transitions in conduit from one metal to a dissimilar metal shall only be made at boxes or other enclosures, except where otherwise specified on shown on the contract drawings.

F. SWITCHES AND PANELS

1. All bus duct switches shall be rated for 200 Amperes, 600V, 3 phase, 4 wire and shall be manufactured by Federal Pioneer LTD #600V-FPL-LSP 1236 SNV-R.

2. Exit lights located within the towers shall be fed from the emergency exit light riser located in both electrical closets on each floor. Exit lights for the concourse, NEPB, SEPB and subgrade locations shall be fed from a fused cut out connected ahead of the main circuit breaker. Exit light fixture shall be Light alarms with a "LED" source.

3. Provide inserts, expansion shield lugs, anchors, bolts with nuts and washers, shims or any other type of fastening devices required to fasten panels or other equipment to foundations, floors, walls or ceilings. Unless otherwise specified herein, or shown on the contract drawings, all fasteners shall be hot-dipped galvanized and of sizes and types recommended by the equipment manufacturer, and as approved by the Architect.

4. All electrical Contractors working in the World Trade Center shall be advised that they will be held responsible for installing all panel trims, trough covers, etc. in the specified work areas, whether or not said trims, covers, etc. were removed by the Contractor, unless the Contractor advises the Inspector of missing trims, covers, etc., prior to the start of work.

5. Panel directories shall be updated to reflect all new work.

6. Existing electrical equipment and panelboards can be modified to accommodate work. Replace existing circuit breakers in panels with identical new breakers as required and update the directories.

7. All motors shall have a disconnect switch in sight of the motor and the switch shall be readily accessible. Note that a disconnect switch in the hung ceiling, or in the building electrical closet is not considered readily accessible.

G. LIGHTING FIXTURES

1. Lighting fixtures in accessible ceilings shall be furnished with flexible conduit connections to separately mounted junction boxes. One junction box shall serve a minimum of four(4) fixtures Maximum length of flexible connection shall be 6'-0".

2. All fixtures and components shall be made in accordance with the NYC Electrical Code. In addition, all lighting track assemblies, with their fittings and fixtures shall be of a type that has been approved by the Advisory Board of the NYC Bureau of Electrical Control See NYC Electrical Code Article 13("Lighting Fixtures") and Bulletin 138-1979("Rules and Regulations Relating to Lighting Track")

3 Lighting fixtures shall be specification grade and furnished complete with all required mounting hardware. Fixtures specified on the drawings establish the performance requirements. Substitutions must meet or exceed the performance of the specified fixture. Submit BS&A and/or MEA approvals for all exit and emergency fixtures.

4. Ballasts shall be CBM certified, UL Class P, rapid start, high power factor, energy efficient type, NEMA sound rating A or better, and compatible with lamps furnished. Three and four lamp fixtures shall utilize one and two lamp ballasts.

5. Recessed fixtures shall be furnished complete with mounting devices and accessories. Where necessary to meet Code requirements, enclosure housings shall be suitable for a one hour fire rating or concrete pour requirements.

   Attachment devices including brackets, plaster rings, saddle hangers, and tie-bars shall be made formed or rolled metal shapes with the requisite rigidity and strength to maintain continuous alignment of the installed fixture

6. Fixtures shall be attached to ceiling supporting members and shall not depend upon lathing or plaster for alignment or support. Fixtures in suspended ceilings shall be supported by saddle hangers or tie-bars attached to runners or between crossbars or ceiling systems. Mounting splines or other positive means of maintaining alignment and rigidity shall be provided. Supporting members shall be surface passivated, and shall be primed or paint dipped to resist corrosion. Fastening devices shall be of a positive, locking type, and shall not require the use of special tools to apply or to remove. Tie wires shall not be used in place of fastening devices.

7. BS& A number is required for all fixtures with plastic lenses or diffusers.

H SECURITY SYSTEMS

1. Security systems must be U.L. listed.

2. Wiring for security systems shall be in conduit and fed from a locked fused cut out. Security panels shall have battery backup.

3. Provide a functional description of emergency systems and security systems Note that at least two stairways must be accessible from any area under all possible conditions such as non-work hours, power failure, smoke conditions, fire, etc.

4. Provide a block or riser diagram for each system, i.e. intercom, smoke detection, and security etc.

5. All tenant security systems must have "fail safe" operation, such that under no circumstances can people be trapped on the floor.

6. The WTC class "E" system does not provide door release for secured doors. This function is the tenant's responsibility normally handled by the tenant's fire alarm system.

7. Secured elevator lobbies are required to have a break glass station to release doors in case of an emergency in addition to tenant smoke detection release.

I A/C SYSTEMS AND SMOKE DETECTION SYSTEMS

1. A/C systems of 2000 CFM and above shall have a smoke detector activate the WTC class"E" system through the tenants smoke detector panel. Smoke detectors shall be located downstream of the filter. Systems over 15,000 CFM shall also have a smoke detector in the return air stream as required by the building code. See WTC fire alarm guidelines for connection details for tenant systems.

2. A/C units shall be interlocked with its associated condensate pump such that if the pump is not operating, the A/C unit shall shutdown on a high water condition in the condenser drain pan.

3. Provide a control wiring diagram for all A/C equipment showing all control devices including all shutdown functions.

4. Provide a disconnecting means for power to all electronic equipment and for A/C units at each major exit of the computer room as required by Article 645 of the NEC.

5. Tenants with preaction systems must conform to the WTC building standards for such installations.(See WTC electrical drawings 5A and 5B).

6. All tenant smoke detectors, door holders, pre-action systems, tamper switches, water flow switches, etc. are the responsibility of the tenant. All testing and periodic maintenance checks must be performed by an authorized contractor hired by the tenant.

7. All areas with raised floors shall have under floor smoke detectors in accordance with NYCBC RS17-5E and NFPA standard 72E.

8. Smoke purge switch shall be WTC standard "2642" firemen keyed switch.

J. DEMOLITION NOTES

1. All circuits affected by the demolition work shall be de-energized at their source prior to beginning any demolition work.

2. Unless otherwise noted, disconnect and remove receptacles with associated wiring, conduit raceways, boxes, and supports on walls to be demolished or where in conflict with new construction. Existing electrical devices shall include, but not be limited to, Tel/Data outlets, receptacles, etc.

3. All material and equipment required to remain in service, but interfering with the alterations, shall be relocated and reconnected using materials and standards of this contract.

4. Provide blank cover plates at open boxes where existing receptacles, electrical services or devices are removed from wall surfaces not scheduled to be repaired or refinished.

5. Unless otherwise indicated, existing services, systems, and wiring serving existing areas outside of demolition area shall remain or be relocated as required to maintain operation of existing systems and avoid conflict with new construction.

6. In the process of removing wiring devices, lighting fixtures and other electrical equipment and materials, the Contractor shall exercise extreme caution to prevent damage to architectural surfaces and materials which are to remain, including walls, floors, ceilings, windows, doors, moldings, structural members, etc.

7. All work shall be properly identified after demolition. Update all panel schedules to reflect equipment and circuit removals.

8. All electrical equipment and hardware not being used shall be removed including conduits, cable, junction boxes, etc.

9. All floor outlets to be removed or abandoned shall have all power wiring and communication cables removed back to the point of origin. The after set fittings shall be removed by coring. An approved steel plate shall be installed over the 2" diameter hole above the power/communication cell. The existing 4" diameter cored hole in the concrete slab shall be filled with non-shrinking grout. A second steel plate shall be inserted into the concrete hole approximately ½" below the top of the slab. The filled hole shall be adjusted to grade.

K CORE DRILLING (See Structural Design Guidelines)

1. Core drilling will be permitted only between the hours of 6:00 P.M. and 8:00 A.M.

2. Coring shall not be closer than 5'0" from the face of columns at any exterior wall, except that four inch (4") diameter cores will be permitted within the induction units.

3. The header duct cannot be core drilled.

4. A drawing must be submitted showing all existing and new cores on the floor where new construction is proposed.

L. FINAL TESTING

Test all wires and cables installed with a 1,000 volt Megohmeter. Furnish the architect with a copy of the results together with an outline of the approved method used. If, in the opinion of the architect, any readings are lower than required by good practice or applicable codes, promptly replace the materials or equipment involved. Should the foregoing tests reveal any defects, promptly correct such defects and rerun the tests until the entire installation is satisfactory in all respects.

PROPRIETARY COMMUNICATIONS SYSTEMS GUIDELINES

A GENERAL

The WTC is equipped to provide telephone, data, and CATV services to the tenant by utilizing the communication vendors within the complex. The tenant has the option of selecting the vendor of their choice. This arrangement is solely the tenant's responsibility. To obtain a list of WTC vendors contact Robert Becker at (212)435-8641.

A Tenant Alteration Application (TAA) is required to be submitted by the tenant to the WTC and must be approved prior to the installation of the communication work.

All communications systems vendors, suppliers, contractors or their representatives shall submit contract drawing(s) entitled "Communications Equipment Plan" with the TAA required by Paragraph A.2

B. SPECIAL REQUIREMENTS

1. Telephone Closets

   a. There are four telephone closets per floor within the towers, several telephone closets per floor in the Plaza Buildings (4 & 5 WTC) and numerous telephone closets that serve the Concourse and subgrade levels. These closets are the link point to the building communication risers. The location of the these closets are indicated on the base building drawings. These drawings can be obtained from the WTC central plan file room.

   b. Generally, telephone closets will not be available for proprietary tenant systems. Tenants who are leasing a minimum of 11,000 square feet of space may be permitted to use a limited area in a specific telephone closet for systems or equipment, however, each situation will require review and approval by the WTC.

2. Distribution System

   a. The header duct connects the telephone closets to the underfloor cell system which is used for the installation of cables throughout the floor. The underfloor duct system layout for the floor under consideration can be obtained from the base building drawings located in the WTC central plan file room.

b. Sleeves, core drilling , or any other type of penetration into the header duct is not permitted. All gaskets shall be restored on the header duct covers, which shall be properly secured with the appropriate fasteners prior to completion of the work. Header duct covers shall be secured in all active public corridors on a daily basis.

3. Contract Drawing Information

The following information shall be shown on all contract drawings submitted for review:

a. The configuration of the header duct, the underfloor cell system, and floor access covers within the Tenant leasehold.

b. The locations and type of all communication terminal stations.

c. Cable distribution plan indicating the type, quantities and sizes of all cable runs.

d. All conduits and penetrations into the underfloor cells.

e. Weight, location and electric power consumption, of all switching and related power equipment, including access requirement if applicable.

f. Electric power requirements, including location, type and capacity of outlets.

g. Heat load generated by each equipment component

h. Backboard locations and design shall be detailed Backboard shall be specified as being constructed of fire retardant plywood.

I. Conduit shall be specified if the underfloor cell system is unsatisfactory. Exposed cable runs on floors will not be permitted

j. Catalog cuts with specifications of vendor equipment shall accompany the contract drawings. Upon written request of the WTC, the contractor/vender shall submit samples of components; e.g., cable, terminal blocks, miscellaneous fittings, etc

k. All outlets to be installed, removed and/or filled shall be shown on a floor plan.

4. Cables

a. All communication and/or signal cable installed in conduit or raceways shall have low smoke jackets. "Teflon" type cable may be run exposed where specifically permitted by the NYC Building Code, NYC Electrical Code, National Electrical Code

b. Cable runs between switchgear or terminal blocks, interconnects and station equipment can utilize the communications section of the underfloor cell system for distribution. All cables installed within "core" areas and in tenant spaces shall have the option of being Teflon in cells, Teflon in conduit, or Teflon exposed in ceilings. All cables installed within a wall or along a wall surface shall be in conduit, "Wiremold" or wire trough in "core" areas and in tenant spaces. Conduit sleeves are required for all wall penetrations; e.g., when entering or exiting a closet or an Equipment Room.

c. Where conduit or sleeves penetrate walls or floors, both faces of the walls or floors at penetrations shall have a non-PVC bushing installed and sealed. In addition, the first termination point after the penetration shall be bushed and sealed. Wiring and cable runs in tenant ceiling areas shall be in conduit and shall be Teflon.

d. All ceiling runs not in conduit shall be neatly bundled and properly supported at maximum intervals of five feet. All ceiling runs in conduit or not in conduit shall be supported independently and not from the ceiling black iron. Methods of support shall be approved by the WTC.

e. All existing telephone cables not being used shall be removed back to the telephone closet or the source switch.

f. The telephone outlet or doghouse is the standard method of entering the underfloor cell system. Palusol packets shall be installed on all telephone outlets or doghouses within the area of work, whether the outlets are new or existing.

g. All penetrations through rated walls and floors shall be fire stopped and repaired to the satisfaction of the WTC.

h. The interconnection between proprietary systems and common carrier systems shall be located on an approved backboard within the Tenant's area and shall be noted as such on the plan drawings. The interconnect cable shall be Teflon and shall be installed overhead and not in the floor cells.

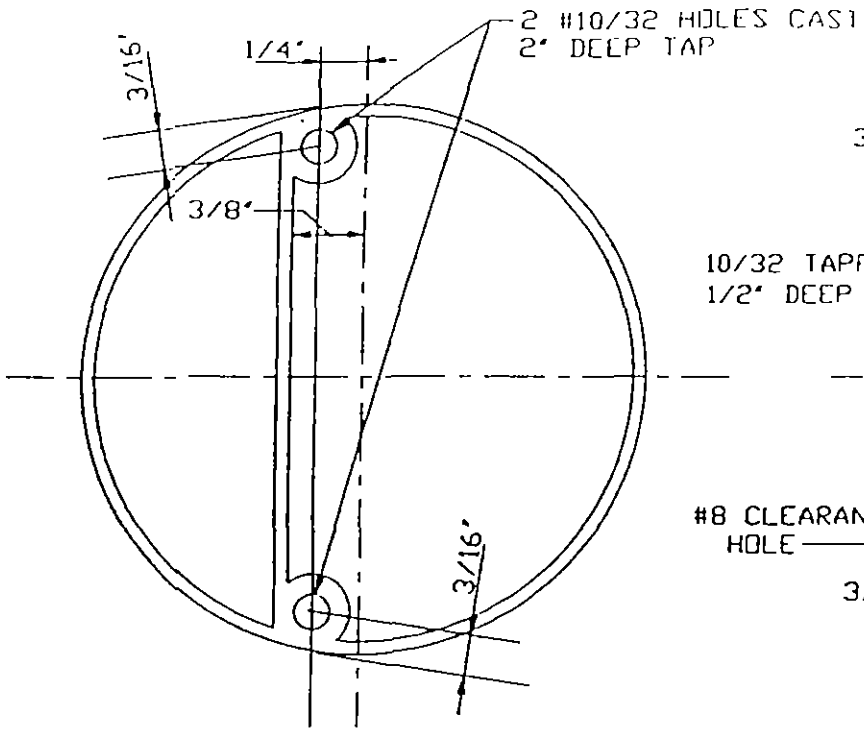

TOP VIEW

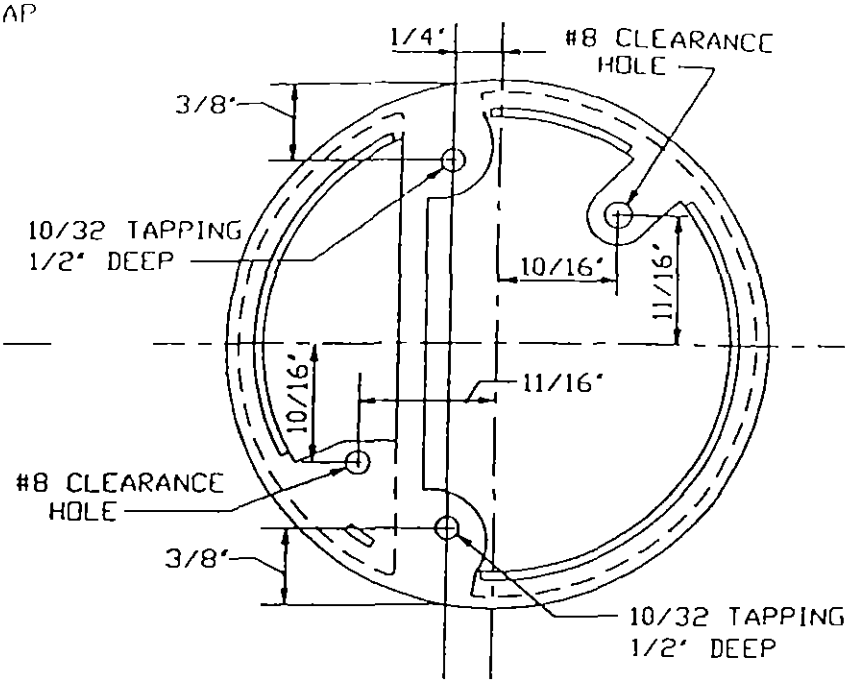

BOTTOM VIEW

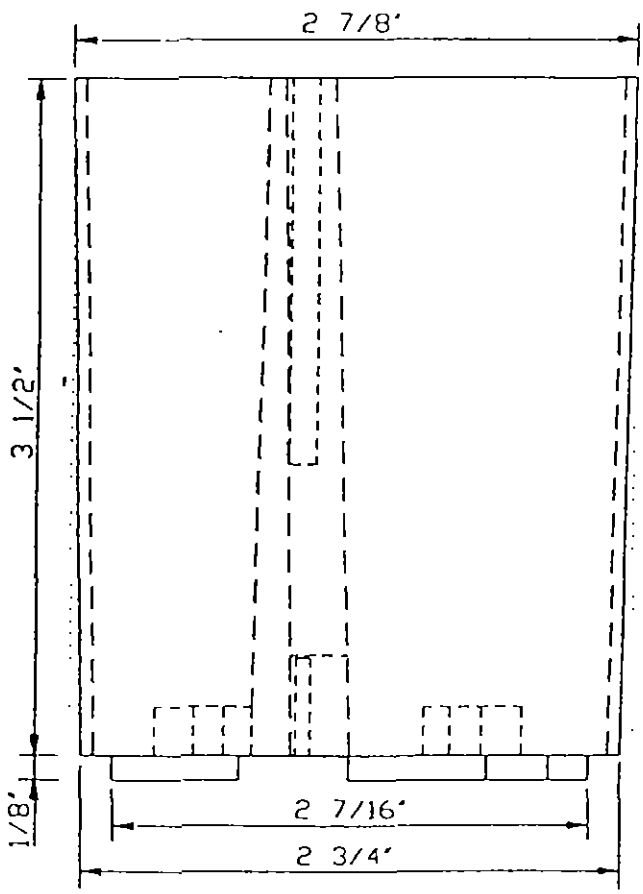

SIDE VIEW

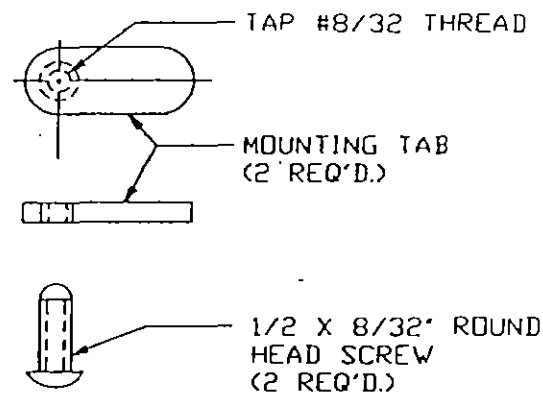

MATERIAL

1. MANUFACTURED OF ZAMAK #3

NOTE:

DIMENSIONS ON THIS DRAWING SHALL BE VERIFIED WITH SAMPLE AFTERSET FURNISHED.

COMBINATION POWER AND TELEPHONE AFTERSET

WTC - ELEC - 1

ITEM	DESCRIPTION OF MATERIAL	REMARKS
1	COMBINATION POWER AND BASE FITTING	
2	DOUBLE TELEPHONE PLATE	
3	SINGLE BLANK PLATE	N.I.C.
4	TOP COVER PLATE	
5	DUPLEX RECEPTALE	ARROW - HART CAT. #6352
6	DUPLEX PLATE	
7	BARRIER	
8	GASKET - 3/16" SPONGE NEOPRENE	

NOTES:

1. ITEM NO. 1 MANUFACTURED OF ZAMAK #3 MATERIAL
2. ITEMS NO. 2, 4, 6 MANUFACTURED OF 1/8" THICK EXTRUDED ALUMINUM ANODIZED WITH HEAVY ETCH.
3. ITEM NO. 7 MANUFACTURED OF 16 GA. GALVANIZED COLD ROLLED STEEL.
4. ITEM NO. 3 MANUFACTURED OF EXTRUDED ANODIZED ALUMINUM.
5. DIMENSIONS ON THIS DRAWING SHALL BE VERIFIED WITH SAMPLE AFTERSET FURNISHED.

DUAL SERVICE FLOOR

FITTING DETAILS

1 OF 7

WTC - ELEC - 2A

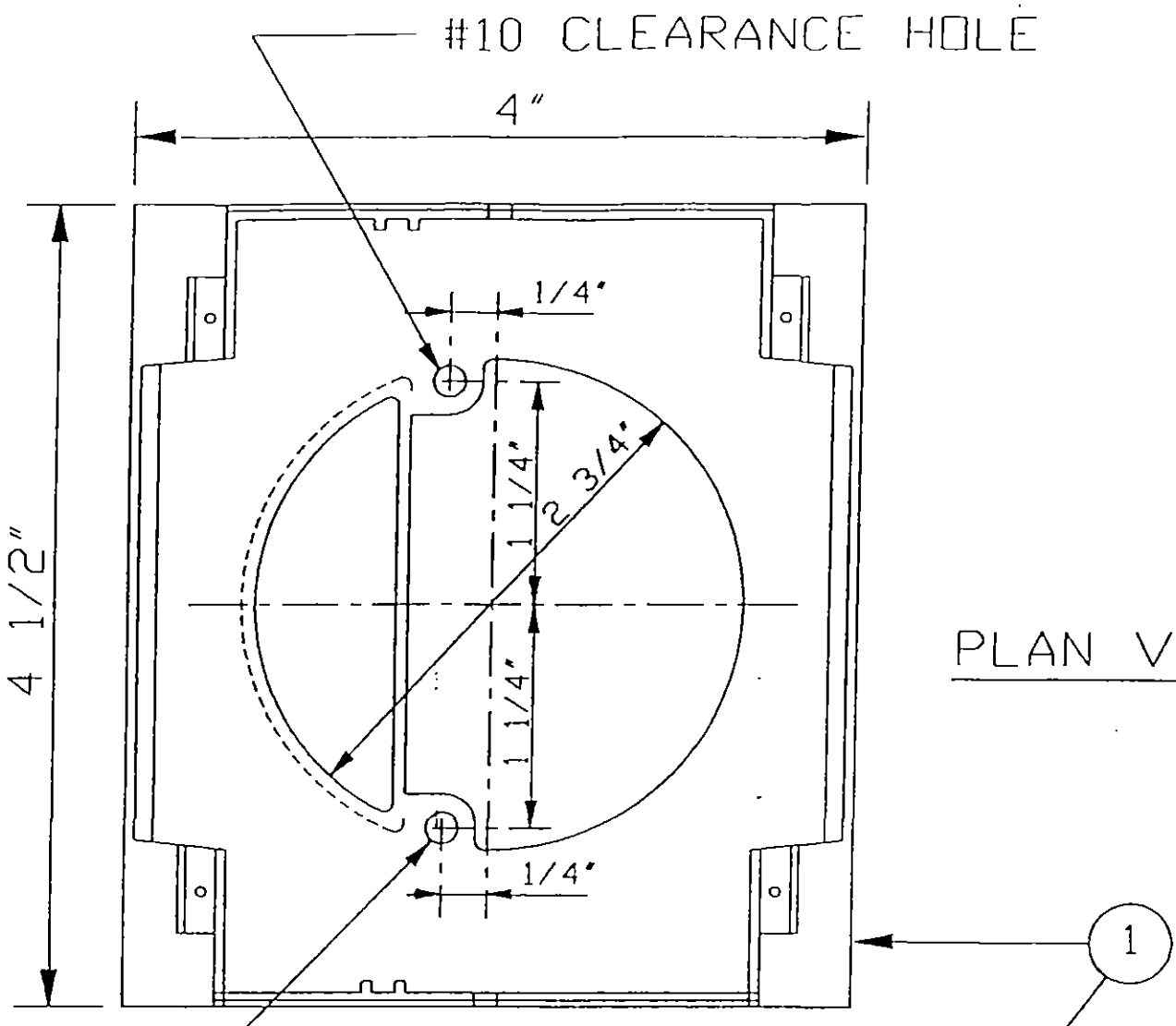

PLAN VIEW

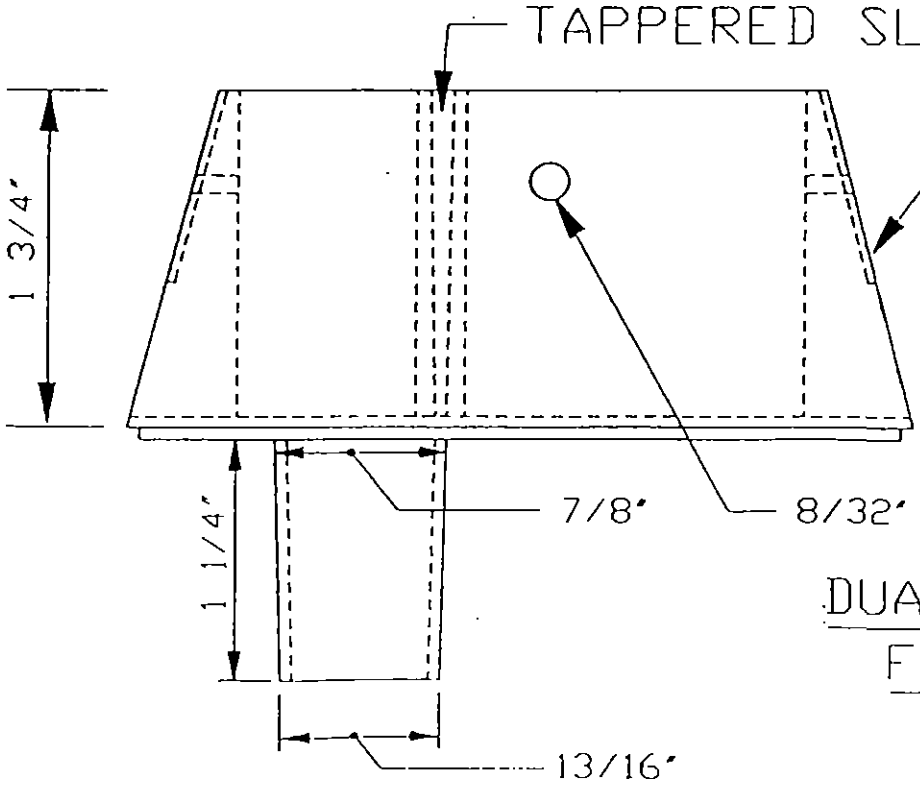

SIDE VIEW

DUAL SERVICE FLOOR FITTING DETAILS

FULL SCALE - 2 OF 7

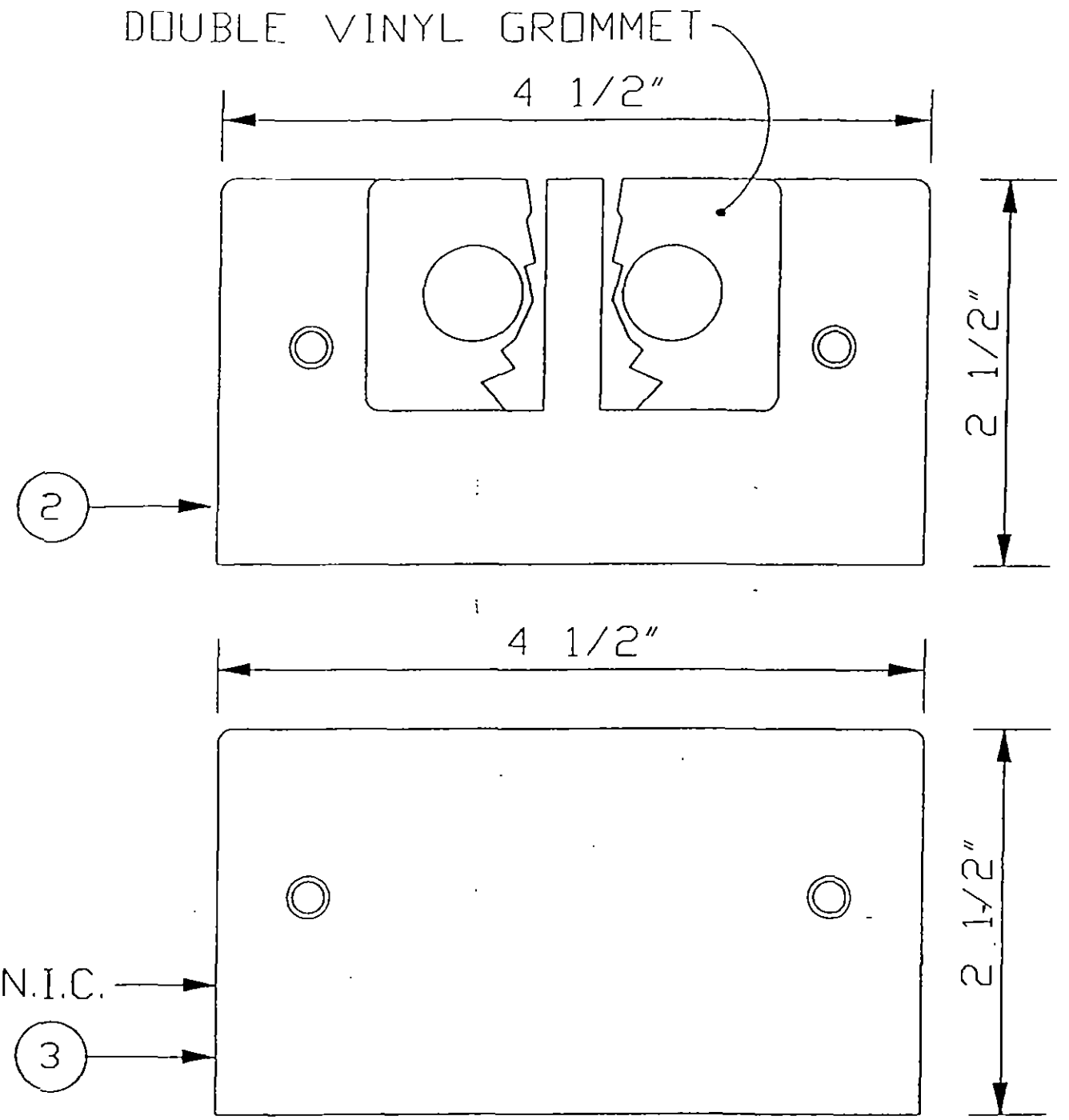

DUAL SERVICE FLOOR
FITTING DETAILS
FULL SCALE - 3 OF 7

WTC - ELEC - 26

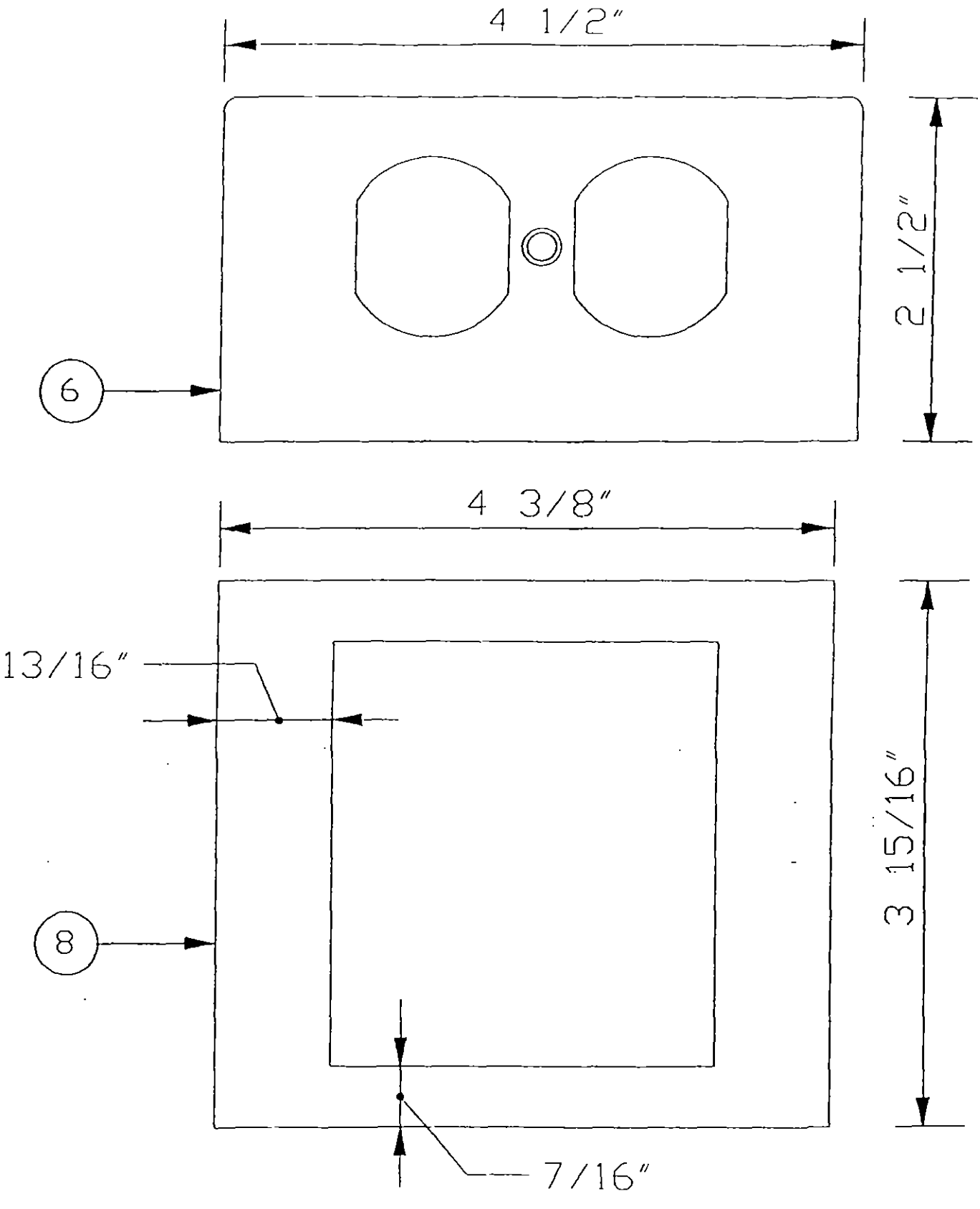

DUAL SERVICE FLOOR

FITTING DETAILS

FULL SCALE - 4 OF 7

WTC - FI FC - 2D

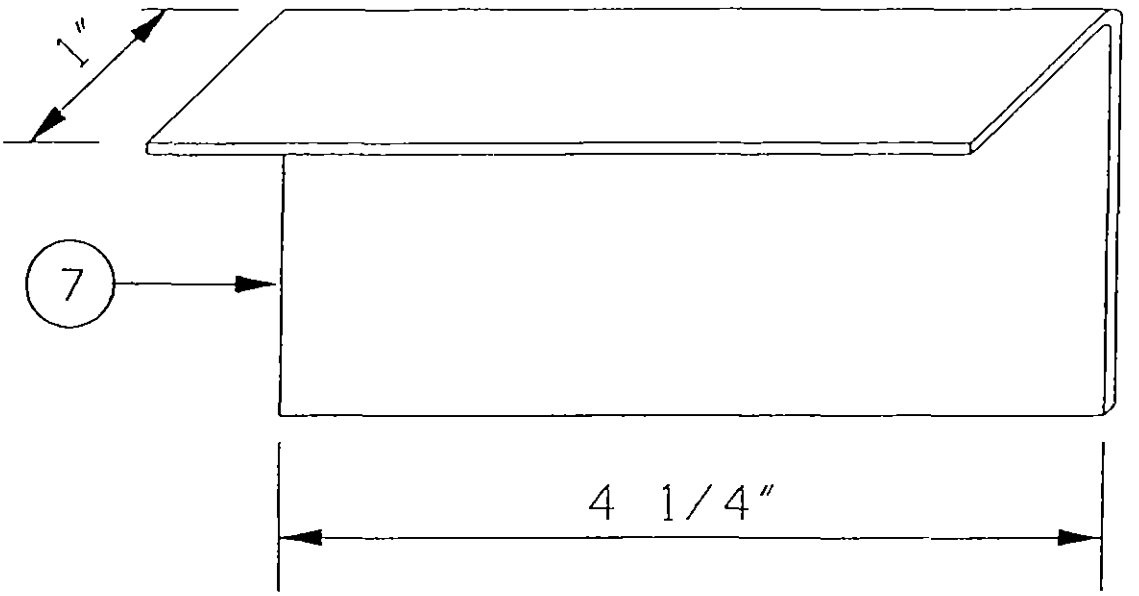

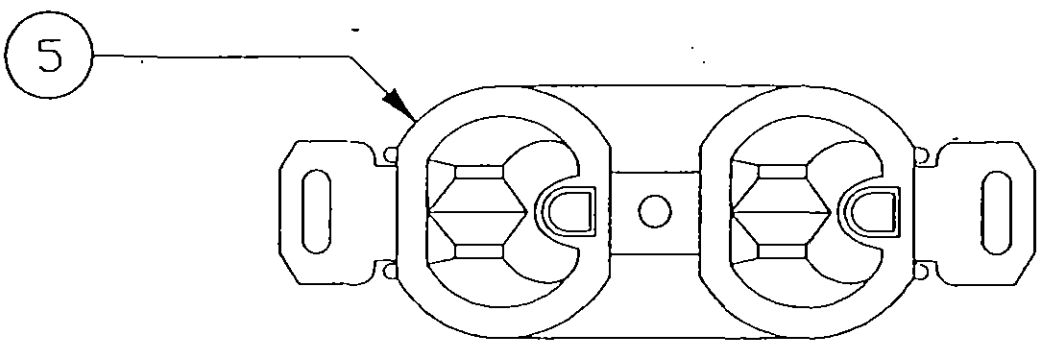

DUAL SERVICE FLOOR

FITTING DETAILS

FULL SCALE - 5 OF 7

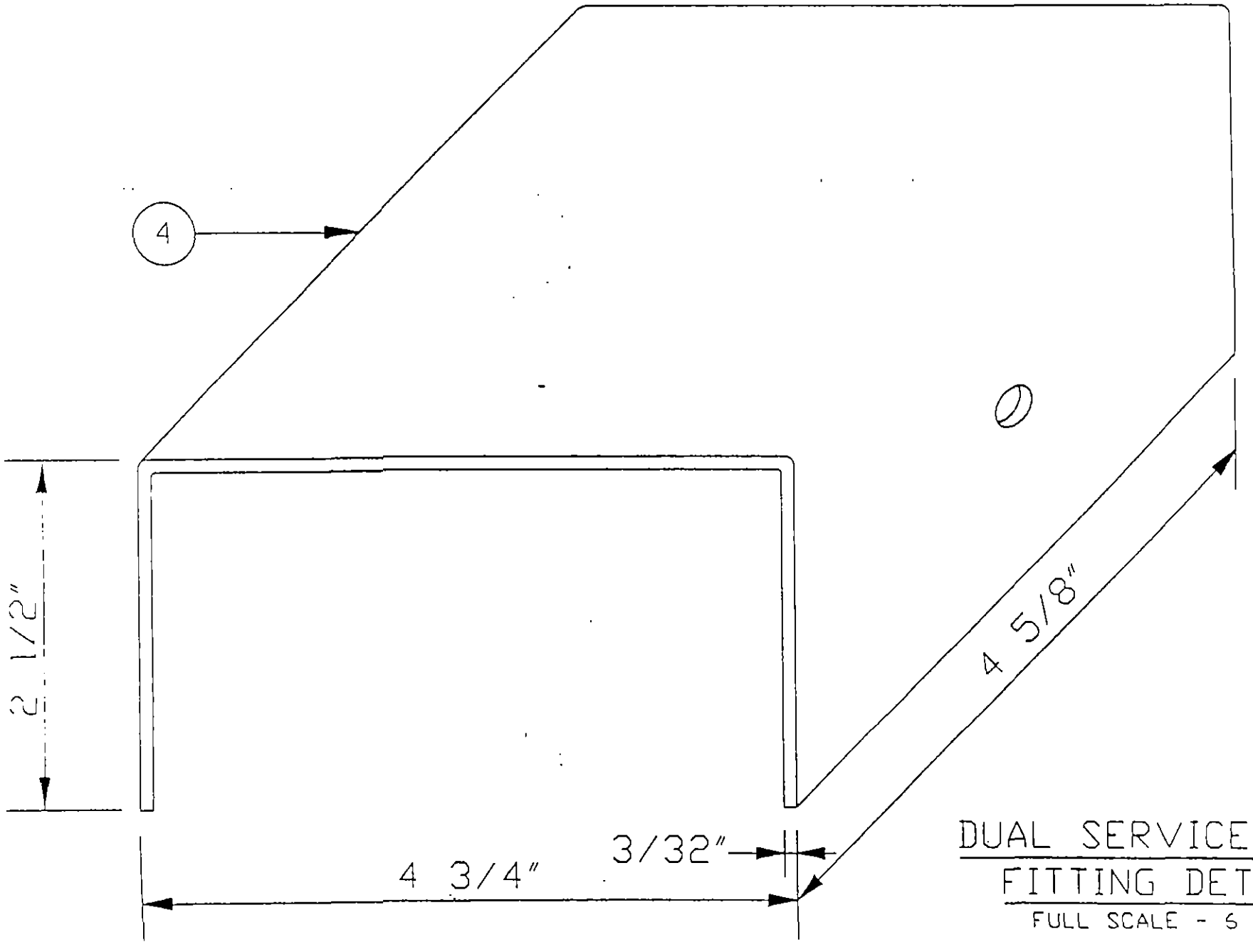

DUAL SERVICE FLOOR FITTING DETAILS

FULL SCALE - 6 OF 7

WTC - ELEC - 2F

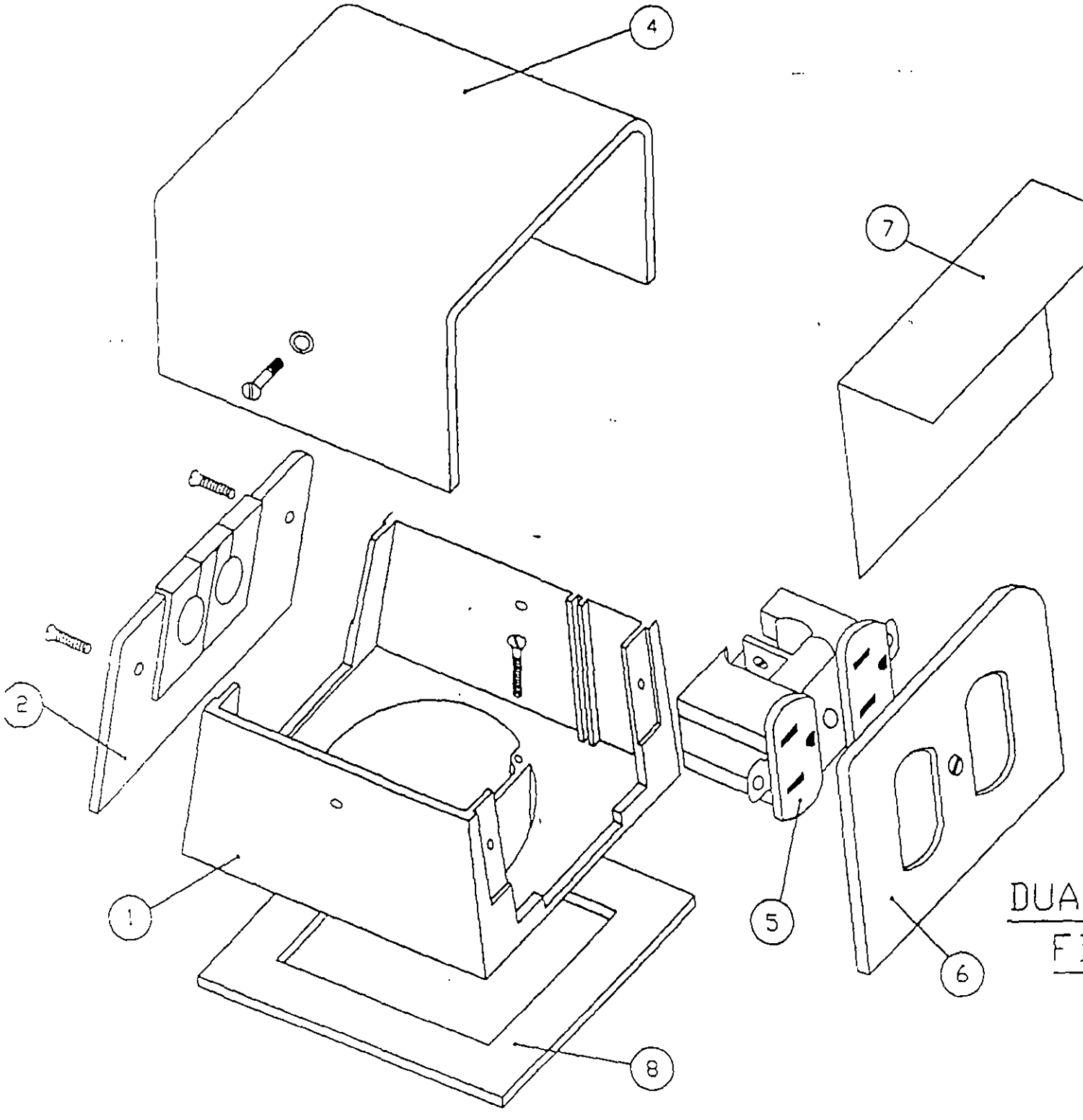

DUAL SERVICE FLOOR

FITTING DETAILS

NOT TO SCALE - 7 OF 7

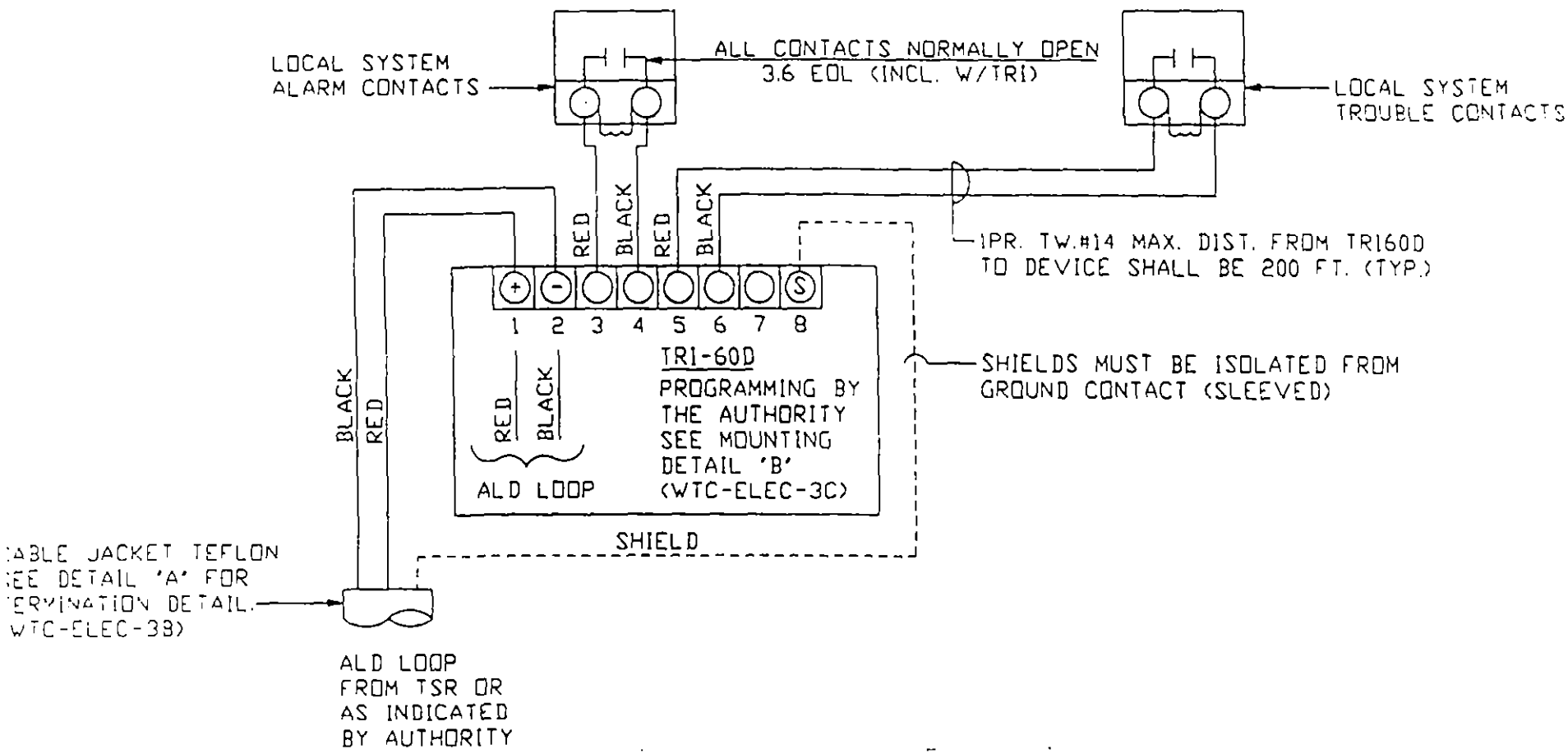

TYPICAL TRI-60D MODULE WIRING DIAGRAM

FOR LOCAL (TENANT) SYSTEM INTERFACE TO THE AUTHORITY CLASS "E" SYSTEM

WTC - ELEC - 3A

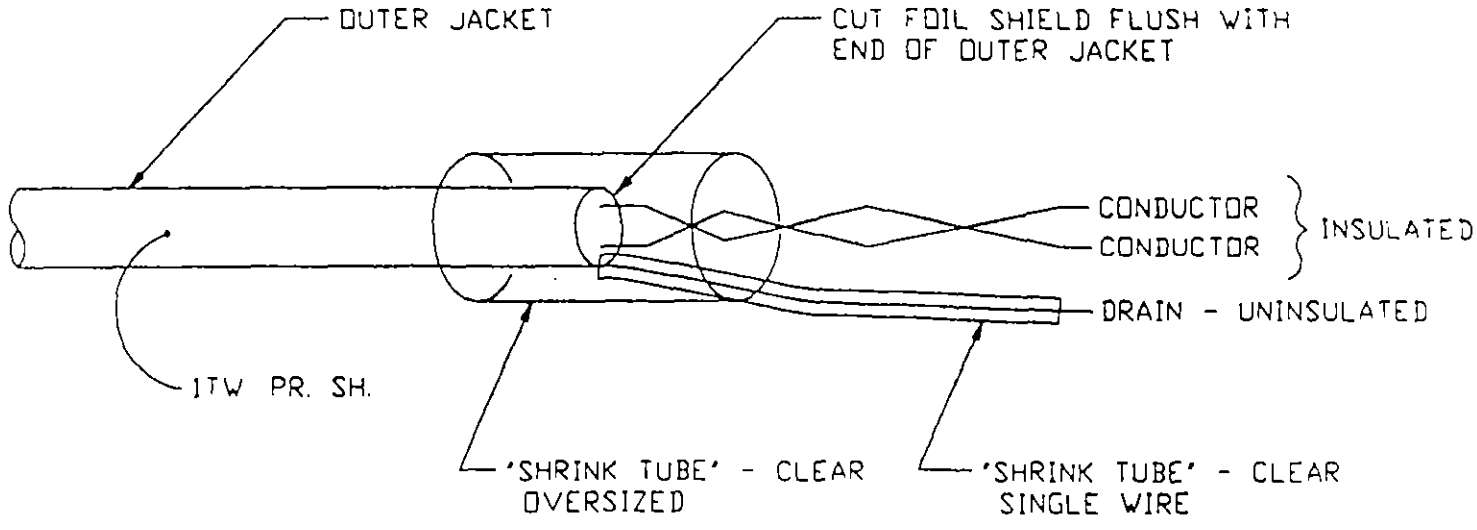

DETAIL "A" - TYPICAL SHIELD/DRAIN INSULATING METHOD

FIRE ALARM SYSTEM

ADDRESSABLE INTERFACE MODELS TRI-60, TRI-60D, AND TRI-60R MOUNT DIRECTLY INTO A 3 1/2 INCH DEEP, DOUBLE GANG SWITCHBOX (USER SUPPLIED) ONLY FASTEN THE MODULE TO THE SWITCHBOX WITH A STANDARD BLANK, DOUBLE GANG SWITCHPLATE (ALSO USER SUPPLIED).

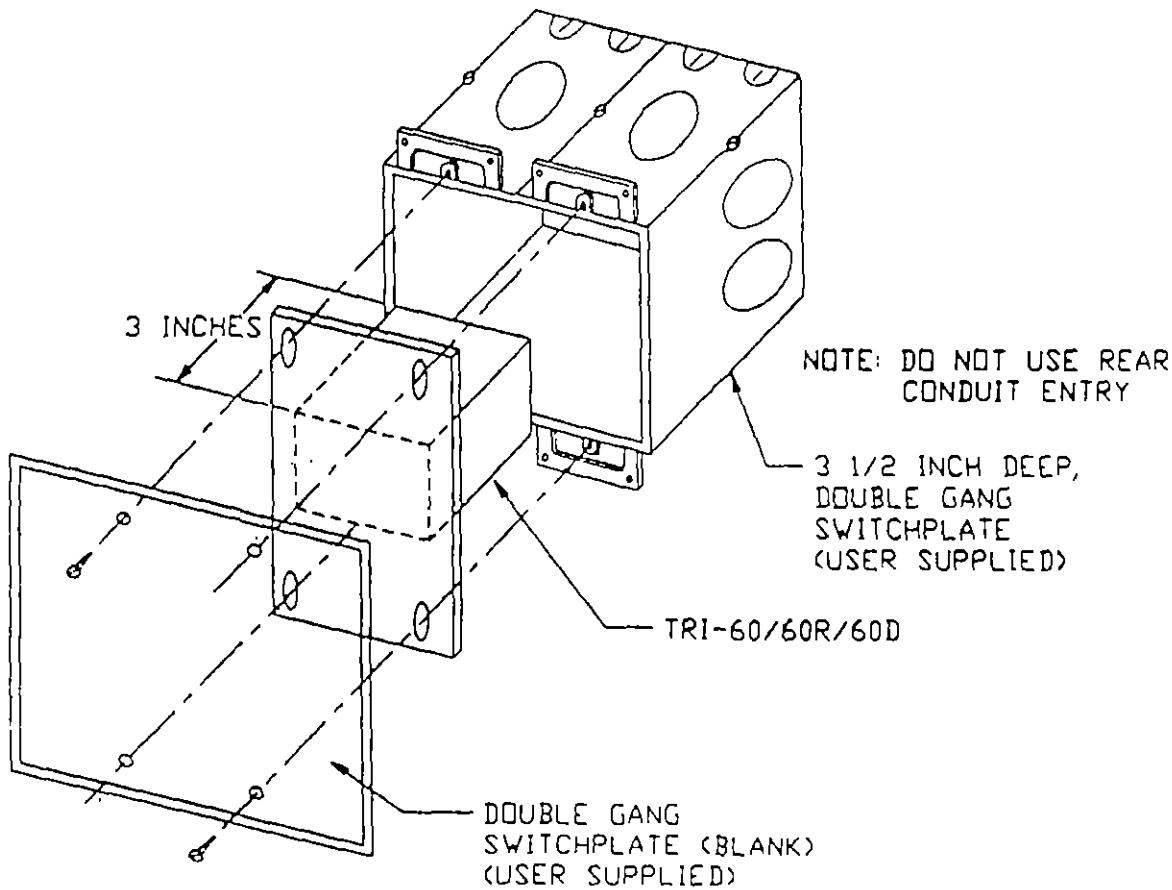

DETAIL "B" - MOUNTING THE TRI-60D

FIRE ALARM SYSTEM

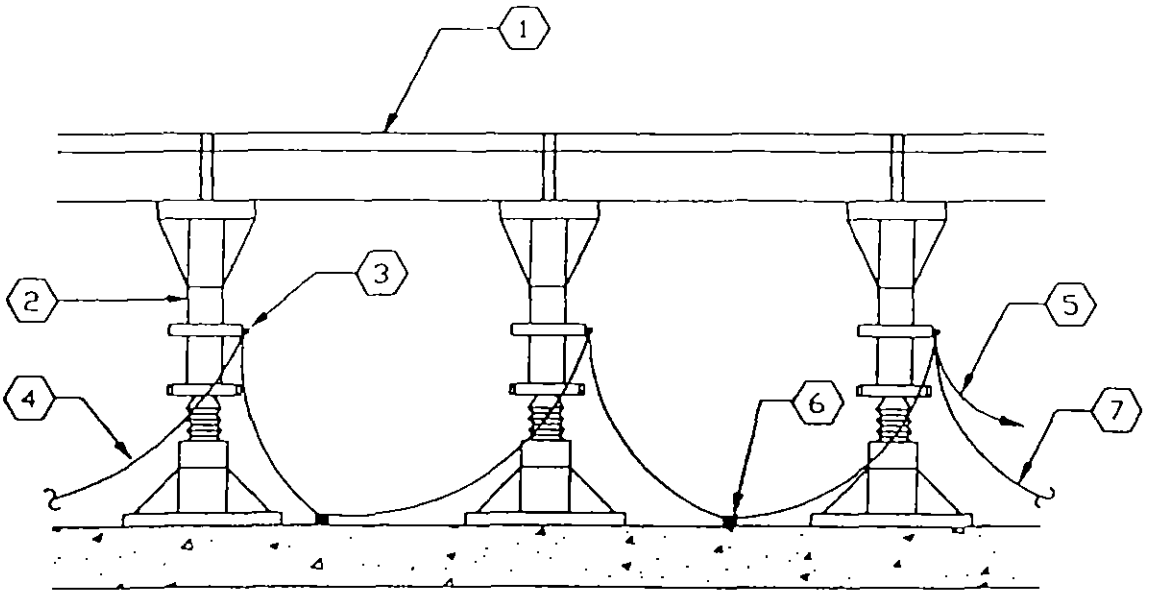

NOTES:

1. RAISED FLOOR TILE
2. RAISED FLOOR PEDESTAL
3. GROUNDING CLAMP - KEEP AS LOW AS PRACTICAL
4. TO NEXT PEDESTAL
5. CONNECT TO COMPUTER ROOM LOCAL COPPER GROUND BAR
6. FASTEN TO FLOOR 5'-0" ON CENTER
7. TO NEXT PEDESTAL

RAISED FLOOR GROUNDING DETAIL

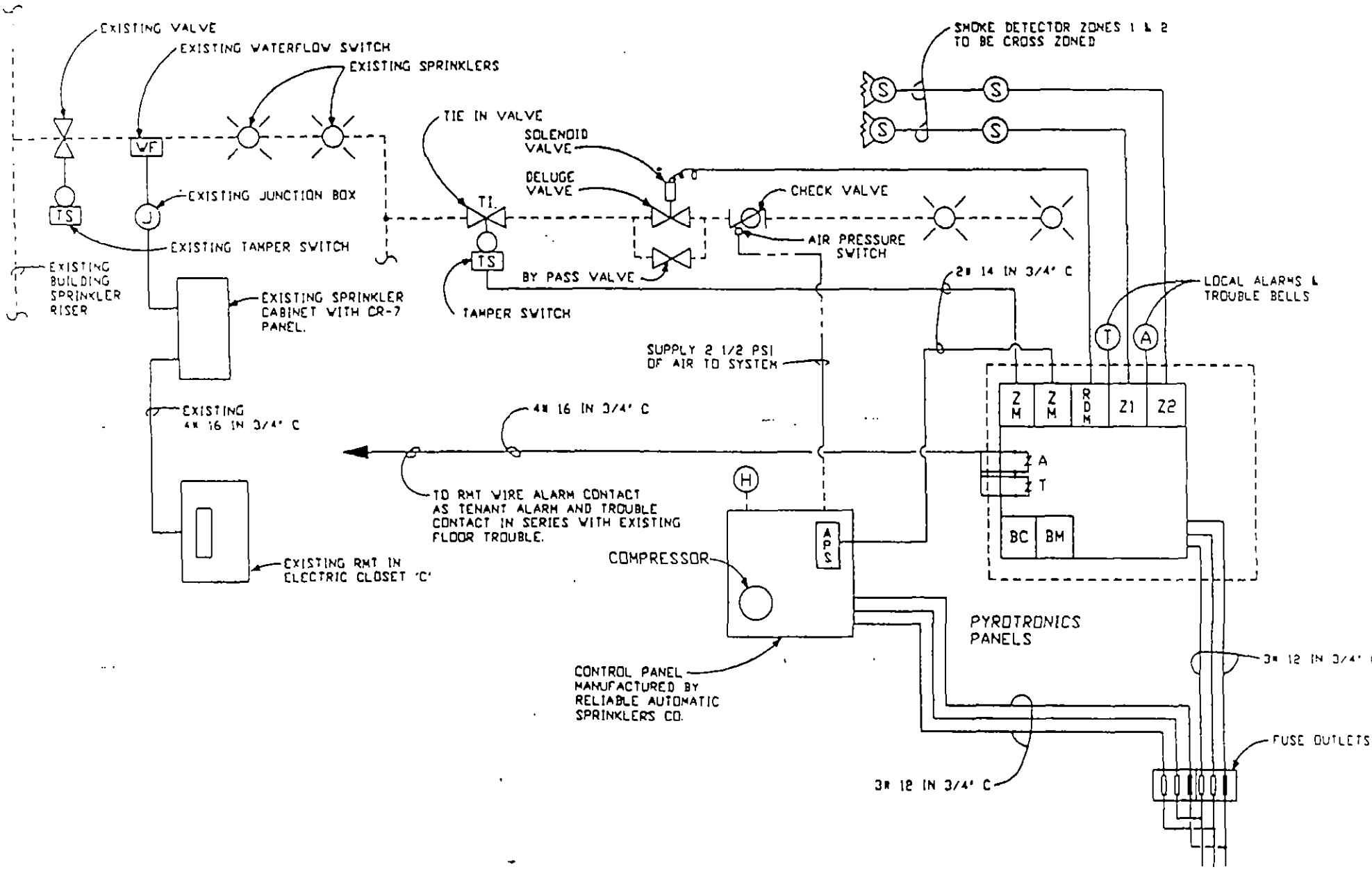

STANDARD PRE-ACTION SPRINKLER DETAILS

DETAILS - 2 OF 2

WTC - ELEC - 5B

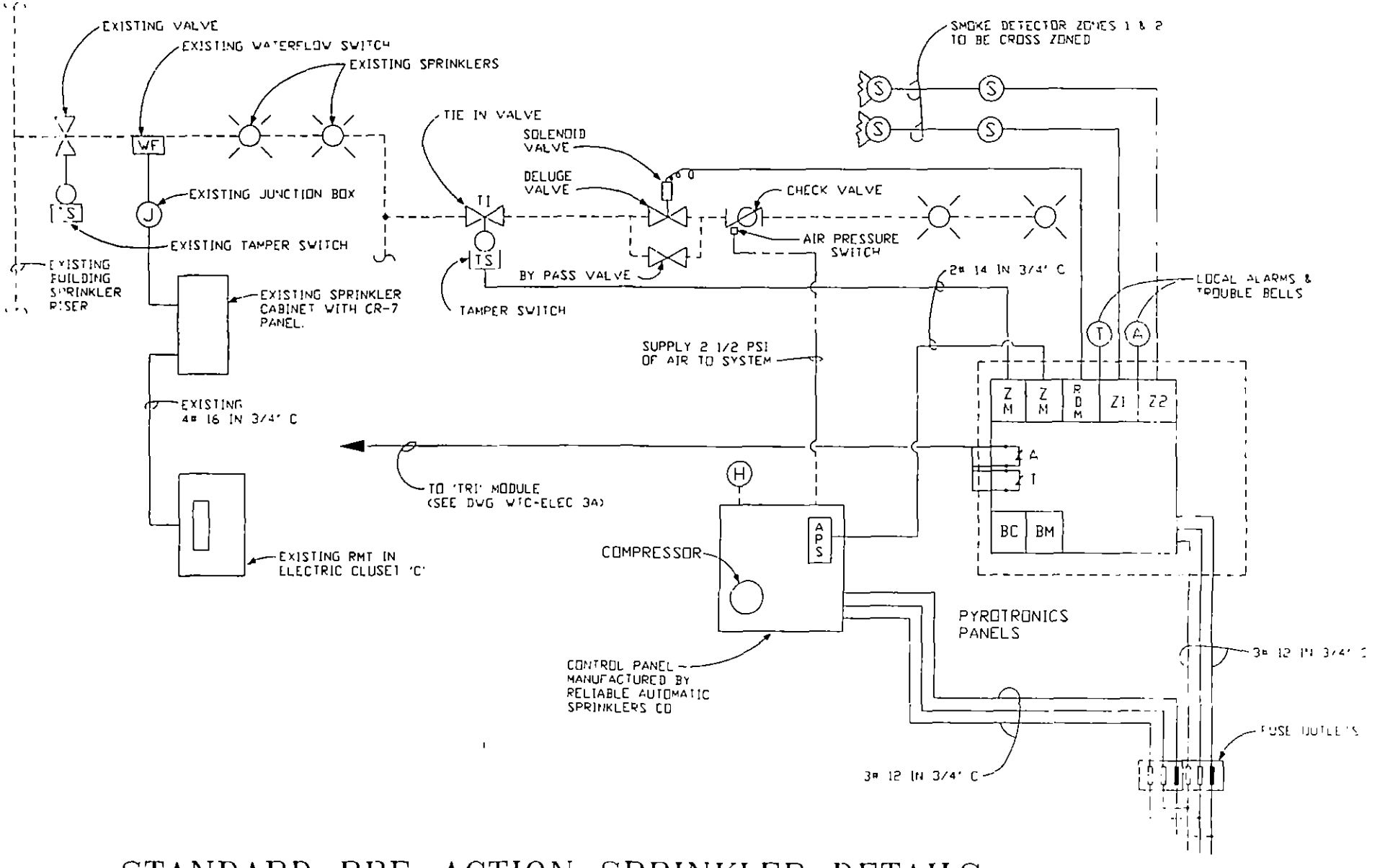

STANDARD PRE-ACTION SPRINKLER DETAILS

DETAILS - 2 OF 2

WTC-ELEC-5B

LEGEND:

– SOLENOID VALVE

(S) – SMOKE DETECTOR

– SMOKE DETECTOR WITH END LINE RESISTOR

– SPRINKLER HEAD

[APS] – AIR PRESSURE SWITCH

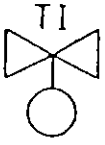 – TIE IN VALVE

[TS] – TAMPER SWITCH

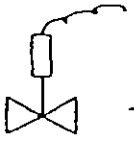 – DELUGE VALVE WITH SOLENOID VALVE

– BY PASS VALVE

(H) – HORN ALARM

(A) – ALARM BELL

(T) – TROUBLE BELL

[BC] – BATTERY CHARGE MODULE

[BM] – BATTERY MODULE

STANDARD PRE-ACTION SPRINKLER DETAILS